NORTHERN WOLVES AIR CONDITIONING

SUBMITTAL TRANSMITTAL

Project:	Saddle River Day School	**Submittal No:**	031
Location:	147 Chestnut Ridge Rd., Saddle River, NJ 07458	**Spec Section:**	230548
Engineer:	Johnson & Urban, 295 Route 34 Colts Neck, NJ 07722	**Date:**	03/22/2026
Architect:	DIGroup Architecture	**Project No:**	DIG #22.036

EQUIPMENT/MATERIAL SUBMITTED:

Vibration isolation for HVAC equipment including spring isolators for major equipment, rubber isolation pads for smaller equipment, and ceiling-hung isolators for suspended units. Per seismic requirements: Site Class C, SRC III, Ip=1.0.

Product	Type	Application	Deflection
Mason Type C Springs	Freestanding Spring	RTUs, Boilers, Pumps	1" static
DiversiTech ISO-Cube	Rubber Pad	Small Equipment/Fans	Per load
Ceiling Hung Isolators	Spring Hanger	Suspended AHUs/Fans	1" static

COMPLIANCE NOTES:

- Seismic restraints per IBC 2021 and ASCE 7-22 Chapter 13
- Site Class C, Seismic Risk Category III, Ip=1.0
- Ss=0.365G, S1=0.071G per project seismic data
- Spring isolators: 1" minimum static deflection
- All-directional seismic restraint snubbers where required
- Compliant with Section 230548 - Vibration and Seismic Controls

NOTES:

Vibration isolator selection based on equipment operating weight and speed. Seismic restraints required per IBC and project structural requirements. Submit seismic calculations with equipment submittals.

Submitted By: Northern Wolves Air Conditioning
Email: ruslan@northernwolvesac.com

MASON INDUSTRIES, Inc.

Manufacturers of Vibration Control Products

350 Rabro Drive
Hauppauge, NY 11788
631/348-0282
FAX 631/348-0279
Info@Mason-Ind.com

2101 W. Crescent Ave., Suite D
Anaheim, CA 92801
714/535-2727
FAX 714/535-5738
Info@MasonAnaheim.com

www.Mason-Ind.com

JOB NAME _____
CUSTOMER _____
CUSTOMER P.O. _____
MASON M.I. _____
DWG. NO. _____

C

1" Deflection
A, B, C, D & E
Series Mounts

Illustration shows single spring C-A, C-B or C-C mount.
C-D & C-E mounts have 2 & 4 springs each respectively.

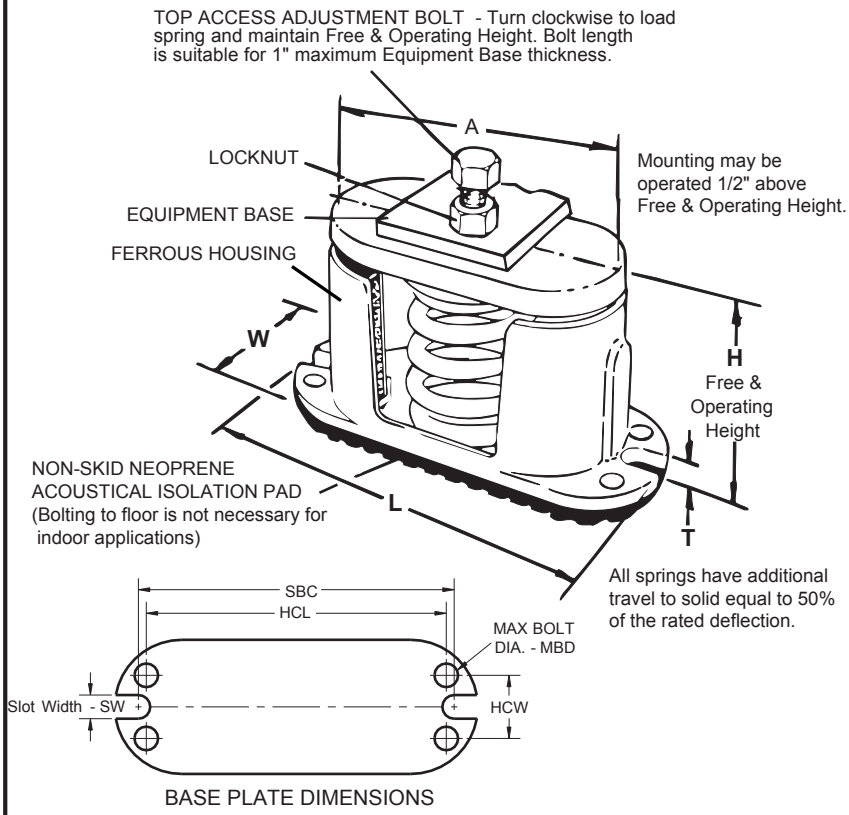

BASE PLATE DIMENSIONS

TYPE C DIMENSIONS (inches) (Casting Dimensions may vary ± 1/8")

Size	A	L	T	W	SW	HCL	HCW	MBD	SBC	Adjustm. Bolt	Free & Oper. Height
C-A	4	5 3/4	1/2	2 1/8	5/16	4 3/4	1	1/4	5	3/8 × 4	4 1/2
C-B	5 3/4	8 1/4	1/2	2 3/4	7/16	6 1/2	1 1/2	3/8	7 1/4	1/2 × 4	5 5/8
C-C	6 5/8	8 7/8	9/16	3 1/2	7/16	7 1/4	1 3/4	3/8	7 7/8	5/8 × 4 1/2	5 5/8
C-D	9 3/4	12	9/16	3 1/2	7/16	10 3/8	1 3/4	3/8	11	5/8 × 4 1/2	6 1/8
C-E	12 1/8	12 3/4	5/8	6 5/8	-	11 3/8	5 1/8	1/2	-	3/4 × 5	6 1/8

TYPE C RATINGS

Size	Rated Capacity (lbs)	Rated Defl. (in)	Spring Constant (lbs/in)	Spring Color/ Stripe
C-A-45	45	1.60	28	Blue
C-A-75	75	1.50	50	Orange
C-A-125	125	1.33	94	Brown
C-A-200	200	1.15	174	Black
C-A-310	310	1.00	310	Yellow
C-A-400	400	1.00	400	Green
C-A-510	510	1.00	510	Red
C-A-625	625	1.00	625	White
C-B-65	65	2.10	31	Brown
C-B-85	85	2.10	40	White/Black
C-B-115	115	2.00	57	Silver
C-B-150	150	2.00	75	Orange
C-B-280	280	1.60	174	Green
C-B-450	450	1.31	344	Red
C-B-750	750	1.12	670	White
C-B-1000	1000	1.00	1000	Blue
C-B-1250	1250	1.00	1250	Gray
C-B-1650	1650	1.00	1650	Black
C-C-1000	1000	1.00	1000	Black
C-C-1350	1350	1.00	1350	Yellow
C-C-1750	1750	1.00	1750	Black*
C-C-2100	2100	1.00	2100	Yellow*
C-C-2385	2385	1.00	2385	Yellow**
C-C-2650	2650	1.00	2650	Red*
C-C-2935	2935	1.00	2935	Red**
C-D-3500	3500	1.00	3500	Black*
C-D-4200	4200	1.00	4200	Yellow*
C-D-4770	4770	1.00	4770	Yellow**
C-D-5300	5300	1.00	5300	Red*
C-D-5870	5870	1.00	5870	Red**
C-E-7000	7000	1.00	7000	Black*
C-E-8400	8400	1.00	8400	Yellow*
C-E-9540	9540	1.00	9540	Yellow**
C-E-10600	10600	1.00	10600	Red*
C-E-11740	11740	1.00	11740	Red**

*with RED core Spring **with GREEN core Spring

CERTIFICATION DATA

TAG : _____

UNIT : _____

PLAN VIEW OF MOUNT LOCATION:

SPECIFIED DEFLECTION _____

1 :	6 :
2 :	7 :
3 :	8 :
4 :	9 :
5 :	10 :
Sets Required:	

FORM S-202 09/2008	DWN:	CHKD:	DATE:	DWG. No.

TECHNICAL DATA SHEET

DIVERSITECH®

ISO-Cube Economy

Product ISO-Cube Anti-vibration Pad

Purpose The DiversiTech ISO-Cube anti-vibration pads are designed to reduce vibration and noise emanating from refrigeration and air conditioning equipment.

Features
- Circular design in each pad offers a suction cup effect, which eliminates the need to bolt the pads down.
- Pads may be cut or torn to required size.

General Specifications
- Made from natural rubber
- 50 durometer pads
- Will withstand a load of 180 PSI

VIBRATION PADS FOR OUTDOOR CONDENSERS

General Characteristics

Stock Number	Dimensions	Number per Pack	Weight
ISO-2	2in x 2in x 3/4in	24	0.1 lbs
ISO-4	4in x 4in x 3/4in	12	0.41 lbs
ISO-18	18in x 18in x 3/4in	6	8.17 lbs

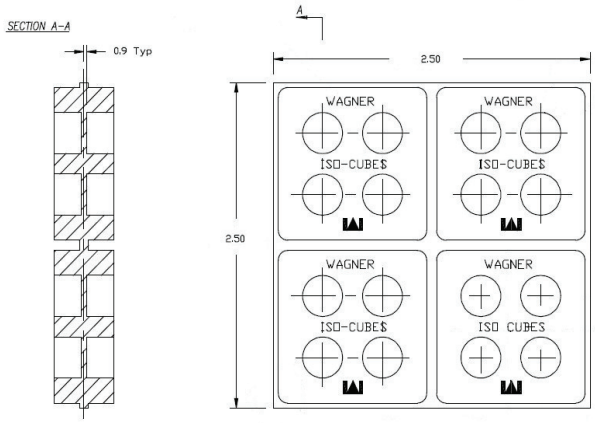

MASON INDUSTRIES, Inc.

Manufacturers of Vibration Control Products

350 Rabro Drive
Hauppauge, NY 11788
631/348-0282
FAX 631/348-0279

2101 W. Crescent Ave., Suite D
Anaheim, CA 92801
714/535-2727
FAX 714/535-5738

Info@Mason-Ind.com • www.Mason-Ind.com

JOB NAME _____

CUSTOMER _____

CUSTOMER P.O. _____

MASON M. _____

DWG No. _____

30

1" 25mm Deflection
X, A, B, C, D & F
Spring Series
Hangers

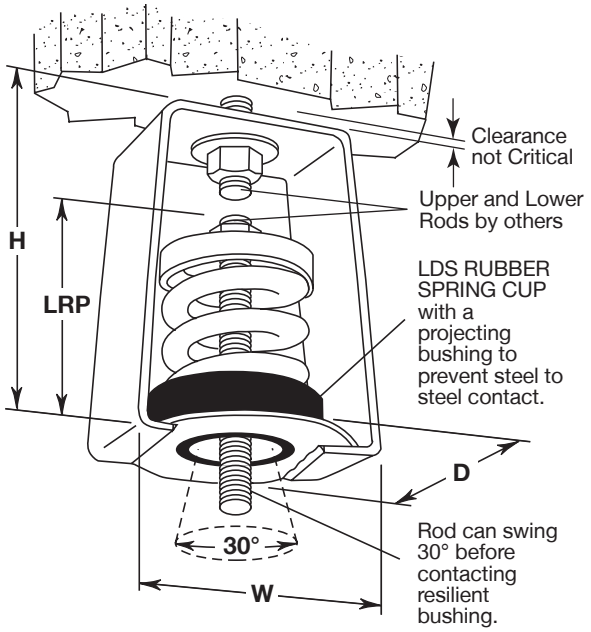

LDS stands for **L**ow **D**ynamic **S**tiffness AASHTO Bridge Bearing Natural Rubber to minimize noise and vibration transmission. Maximum Dynamic Stiffness is 1.4.

TYPE 30 RATINGS

Type and Size	Rated Capacity (lbs)	(*kg*)	Rated Deflection (in)	(*mm*)	Spring Constant (lbs/in)	(*kg/mm*)	Spring Color
30-X-12	12	*5*	1.25	*32*	10	*0.18*	Orange
30-X-23	23	*10*	1.30	*33*	18	*0.30*	Brown
30-X-33	33	*15*	1.10	*28*	30	*0.54*	Copper
30-X-54	54	*24*	1.20	*30*	45	*0.80*	White
30-X-76	76	*34*	1.00	*25*	73	*1.36*	Black
30-X-113	113	*51*	1.00	*25*	113	*2.04*	Brass
30-X-130	130	*59*	1.00	*25*	130	*2.36*	Purple
30-X-175	175	*79*	1.00	*25*	175	*3.16*	Silver
30-X-210	210	*95*	1.00	*25*	210	*3.80*	Blue
30-A-12	12	*5*	1.00	*25*	12	*0.20*	Copper
30-A-18	18	*8*	1.00	*25*	18	*0.32*	Gray
30-A-25	25	*11*	1.00	*25*	25	*0.44*	Orange
30-A-41	41	*19*	1.18	*30*	35	*0.63*	Pink
30-A-56	56	*25*	1.14	*30*	49	*0.83*	Black
30-A-73	73	*33*	1.06	*27*	69	*1.22*	Tan
30-A-95	95	*43*	1.01	*26*	94	*1.65*	Green
30-B-138	138	*63*	1.32	*34*	105	*1.85*	White
30-B-222	222	*101*	1.16	*29*	191	*3.48*	Blue
30-B-278	278	*126*	1.09	*28*	255	*4.50*	Purple
30-B-336	336	*152*	1.00	*25*	336	*6.08*	Silver
30-B-410	410	*186*	1.07	*27*	385	*6.89*	Black
30-B-540	540	*245*	1.00	*25*	540	*9.80*	Yellow
30-C-630	630	*286*	1.13	*29*	558	*9.86*	Gray
30-C-800	800	*363*	1.00	*25*	800	*14.52*	Orange
30-C-1010	1010	*458*	1.10	*28*	920	*16.36*	Green
30-C-1265	1265	*574*	1.00	*25*	1265	*22.96*	Red
30-D-1575	1575	*714*	1.23	*31*	1280	*23.03*	Pink
30-D-2150	2150	*975*	1.03	*26*	2095	*37.50*	Purple
30-F-2760	2760	*1252*	1.00	*25*	2760	*50.08*	Silver

TYPE 30 DIMENSIONS

Type and Size Range	D – Depth (in)	(*mm*)	H – Height (in)	(*mm*)	W – Width (in)	(*mm*)	LRP (in)	(*mm*)	MRD (in)	(*mm*)
30-X-12-210	21/2	*64*	41/4	*108*	27/8	*73*	31/2	*89*	3/8	*10*
30-A-12-25	23/4	*70*	53/4	*146*	31/4	*83*	31/2	*89*	5/8	*16*
30-A-41-95	23/4	*70*	53/4	*146*	31/4	*83*	4	*102*	5/8	*16*
30-B-138-540	4	*102*	71/4	*184*	43/4	*121*	41/4	*108*	5/8	*16*
30-C-630-1265	4	*102*	83/4	*222*	51/4	*132*	5	*127*	3/4	*19*
30-D-1575-2150	43/4	*121*	121/2	*318*	53/4	*146*	7	*178*	7/8	*22*
30-F-2760	6	*152*	12	*305*	61/4	*159*	7	*178*	7/8	*22*

LRP - Lower Rod Diameter
MRD - Maximum Rod Diameter

All springs have additional travel to solid equal to 50% of the Rated Deflection.

PLAN VIEW OF HANGER LOCATIONS

TAG: _____

UNIT: _____

_____ **SPECIFIED DEFLECTION**

1:	6:
2:	7:
3:	8:
4:	9:
5:	10:
Sets Required:	

Certification Form S-606 09/2014	DWN	CHKD	DATE	DWG No.